PDES Requirements / Traceability Project

Alejandro Ventura
Systems Engineer
Honeywell Aerospace

GLOBAL PRODUCT DATA INTEROPERABILITY
SUMMIT
2014

ELYSIUM Parker NORTHROP GRUMMAN BOEING

Requirements / Traceability Overview

- **Limited project to investigate standards-based exchanges of requirements and tracing relationships among Systems Engineering tools**
- **Pilot requirements management and impact analysis within multi-tiered supply chains; identify gaps and best practices**
- **Use STEP AP233 exchange standards and common tools for pilot with industry use cases**
- **Investigate fidelity for traceability in STEP models and exchanges.**

Project Objectives

- **Align PDES use cases and activities with SAVI, INCOSE, and MoSSEC efforts**
- **Develop higher fidelity System Engineering tool exchanges with less support**
- **Identify metrics to assess ROI of requirements & traceability exchange practices to encourage translator development**
- **Document translation best practices and gaps**

Use Cases

- **Text-based Requirements Exchanges Among Organizations**
  - **Standards based with OOTB functions**
  - **Minimal / no configuration by users**
- **Tracing Between Requirements Repositories**
  - **Same and different tools**
  - **Some level of customization of the requirements management systems**
- **Tracing Between Requirements and CAD Model Features**
  - **"Is satisfied by" linked to (multiple) CADID's / GUID's and Reference Designators in CAD model**
  - **Improve impact analysis and verification processes; reuse Systems Engineering functions more broadly in supply chain**

Systems Engineering Exchange Trends

Global Product Data Interoperability Summit | **2014**

Text	Models & DB's	Diagrams
↓	↑	↑
↓	↑	↑
↓	↑	↑
–	↑	↓
–	↑	↓
↓	↑	↓

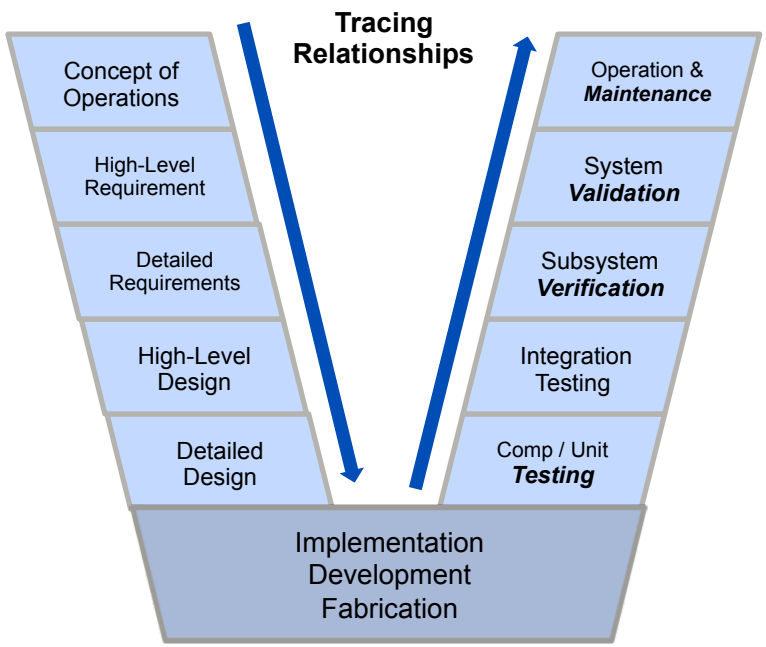

Text	Models & DB's	Diagrams
↓	↑	↑
↓	↑	↑
↓	↑	↑
–	↑	↓
–	↑	↓
↓	↑	↓

MBD / MBE Impacting Systems Engineering Processes:

1. Model exchanges increasing
2. Text based requirements will not go away

2013 Proof of Concept

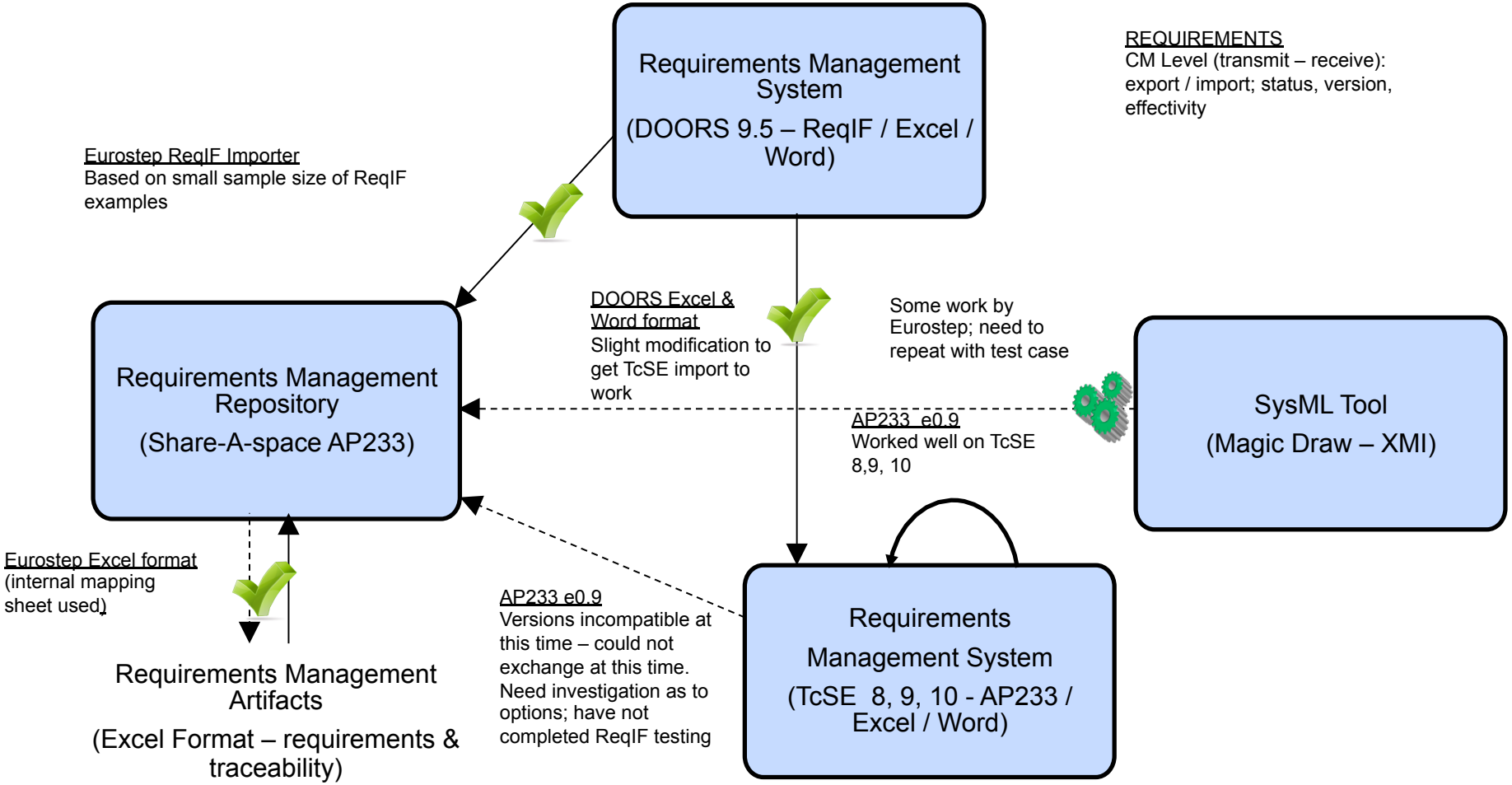

2014: Development of Fictitious Test Assembly Artifacts

Electrical

- PB's and Schematics created in Mentor Graphics DxDesigner and Expedition
- All schematic symbols and board geometries set to be public
- Daughter card based on main card
- Fiducials, test points, and features that can be referenced in requirements
- *Stretch goal is to incorporate SAVI test cases into process*

Mechanical

- Chassis, hardware, shall be created in 1 or more: CREO2 , NX - done
- Wire harnesses shall be created in 1 or more: CREO2 - done, NX – possible
- Flex tape created in Mentor Expedition, translated to CREO2 for visualization
- Mounted on NIST mechanical models with PMI inserted: CREO2

Requirements

- 5 sets of related requirements created (single sentence)
- Simple tracing relationships to parts, documents, and GUID / CADID artifacts
- Industry Standard and test notes
- Dummy reference documents for specifications, Concept of Operations, etc.

EBOM

- Product structure in PDM and PLM

Fictitious "Ion Drive Assembly" Product Structure

Global Product Data Interoperability Summit | **2014**

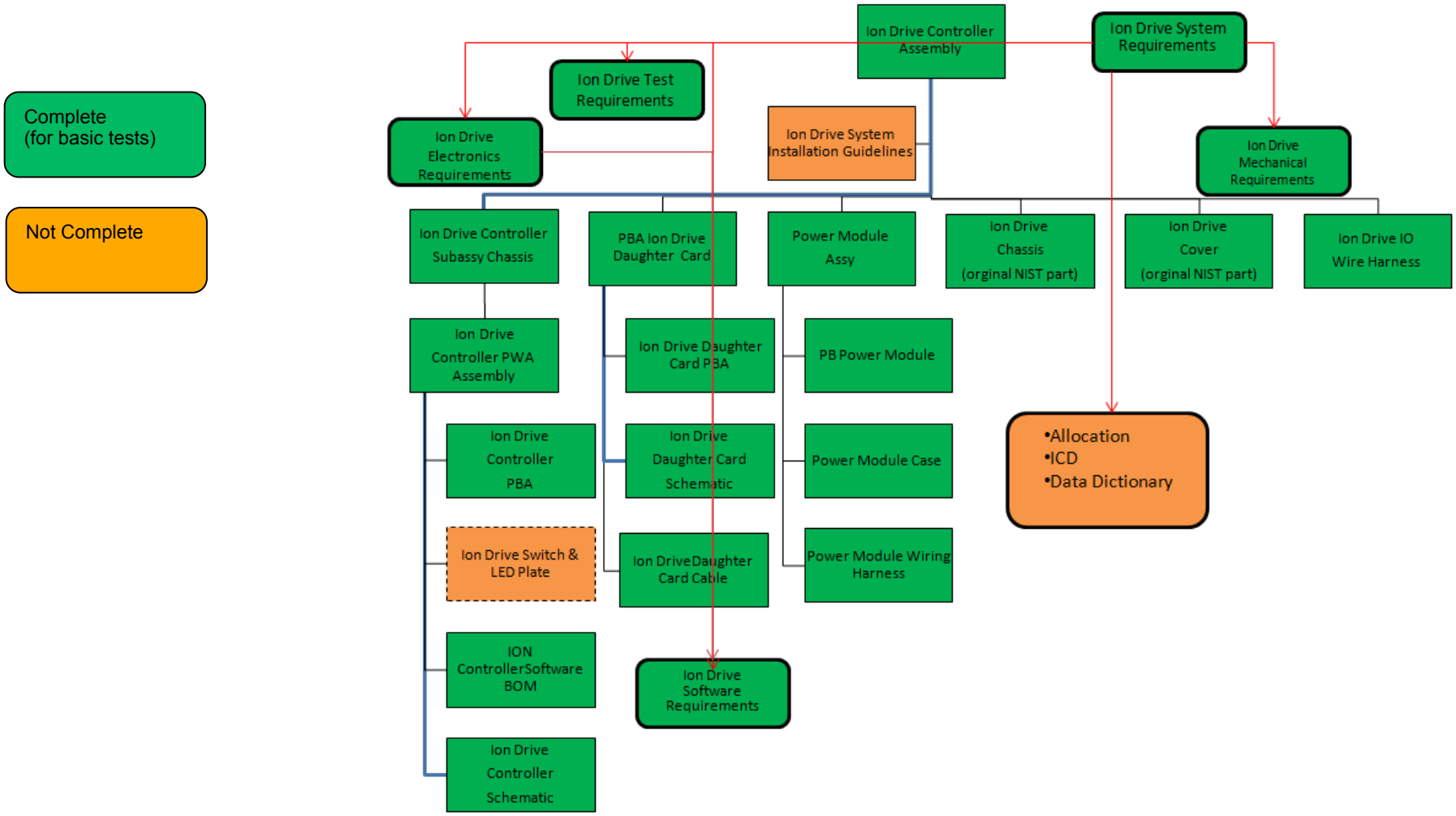

Tracing from Requirements to Physical Elements

Global Product Data Interoperability Summit | **2014**

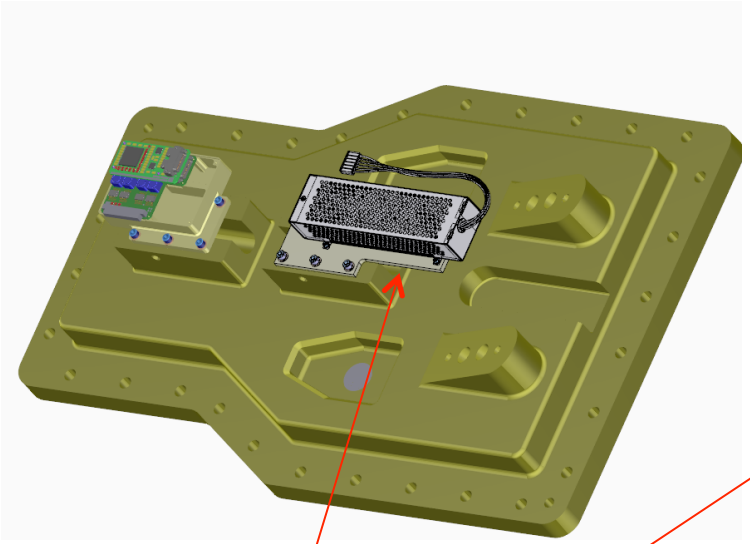

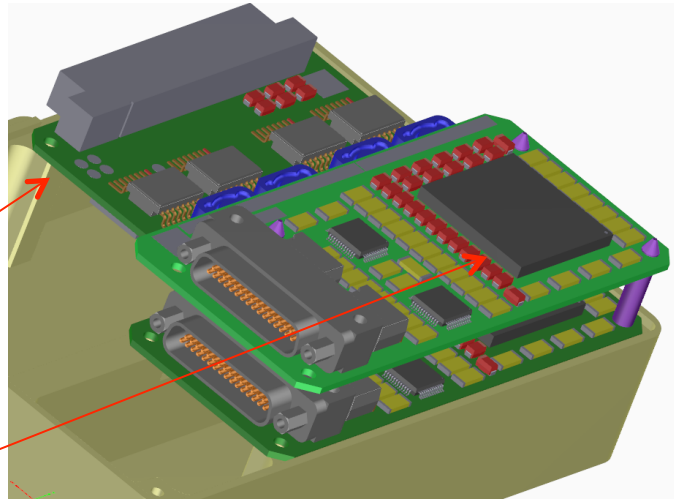

ID		Requirement ID	Parent ID	TracedFrom	Short name	Textual definition	Version	Type	Criticality	Source Document	Source Document Vers
1	1	SReq1.0			Delivered system wet weight	The solution shall have a maximum wet weight, including integrated attach points, of 150 Kg	v001	Functional	High	Doc-1	v001
2	2	SReq2.0		SReq1.0	Delivered system spaceclaim	The solution, including attach points shall not exceed a physical space of 0.5M X 0.75M X 1M	v001	Functional	High	Doc-1	v001
3	3	SReq2.1			All control functions for AdvPE II	The solution shall provide all control functions to the Advanced Ion Propulsion Engine Mark II	v001	Functional	Medium	Doc-1	v001
4	4	SReq2.2			Shutdown during launch	System shall automatically safe the thruster mechanism during atmospheric flight	v001	Hazard	High	Doc-10	v008a
5	5	SReq3.0			Emergency safing	The solution shall provide an emergency safing function to shutdown the primary thruster within 2 seconds of a defined safety interrupt.	v001	Safety	High	Doc-10	v008a
6	6	SReq3.1			Safety Interuppt - loss of communications	The loss of communication with Mission Control for 48 consecutive (Earth) hours will be considered a loss of communication to the system and cause a safety interrupt to be invoked.	v001	Safety	High	Doc-10	v008a
7	7	SReq3.2		SReq3.0	Safety Interrupt - over thrust condition	The receipt of a +3.3V (in reference to SystemGround) signal for more than 5 seconds on the "OverThrustTriggerSensor" controller input, will be considered a safety interrupt event by the controller and cause an Emergency Safing condition.	v001	Hazard	High	Doc-10	v008a
8	8	SReq3.3		SReq3.0	Safety Interrupt - reactor out of spec condition	The receipt of a +12V (in reference to SystemGround) signalr for more than 60 seconds on "OutOfSpecificationTriggerSensor" controller input, will be considered a safety interrupt event by the controller and cause an Emergency Safing condition	v001	Hazard	High	Doc-10	v008a

Phase I: trace from requirement to part number and version
Phase II: trace from requirement to CAD features (GUID / CADID / Reference Designator

- What are the best practices to express these relationships in the key standards?
- How best to handle groupings & feature groups?

Product Development Systems Engineering Exchanges

Global Product Data Interoperability Summit | **2014**

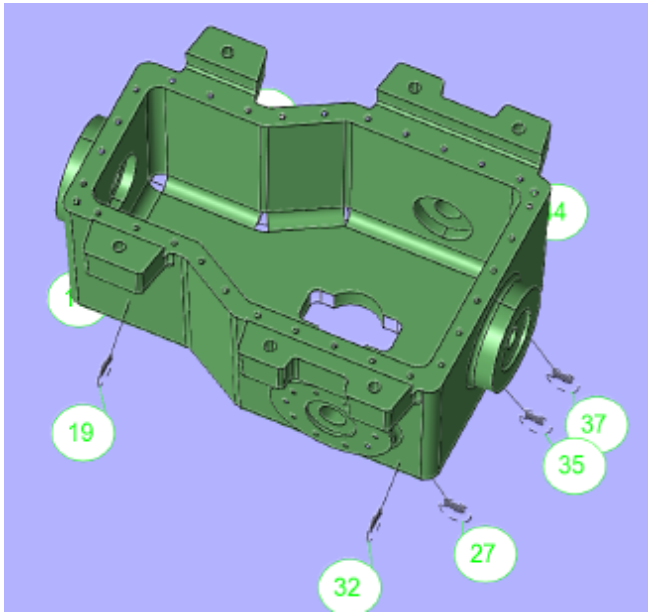

- Requirements can be traced to processes and factory instructions.
- Measured observations readily available

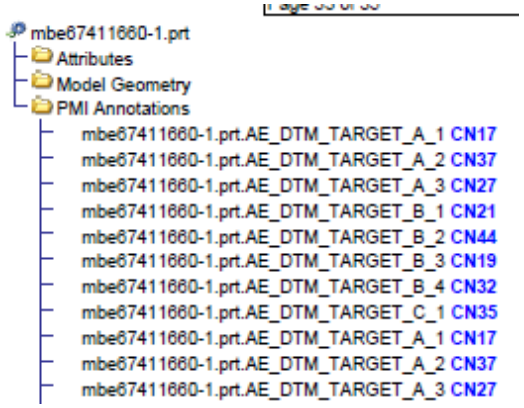

1	AS/EN/SJAC 9102 Rev A			Form 3: Characteristic Accountability, Verification and Compatibility Evaluation							
2	1. Part Number					2. Part Name			3. Serial Number		4. FAI Report
3	mbe67411660-1.prt										
4	Characteristic Accountability					Inspection / Test Results				Optional Fields	
5	5. Char No.	6. Ref. Location	7. CHR Class	8. Requirement	GD&T Symbols	9. Results	10. Designed Tooling	11. N/C NO.	14a FAI Insp. Measuring Equipment	14b Production Measuring Equipment	14c FAI Inspector Identification
6	1	MBD_A[ATC_050/*]	Minor	Diameter - Basic: = 100 in 2 places		Non-Reportable					
7	2	MBD_A[ATC_050/*]	Minor	True Position: <= 1.5 in measure at maximum material condition (MMC); Measured in reference to datums A, B, C							
8	3	MBD_A[ATC_050/*]	Minor	True Position: <= 1 in measure at least material condition (LMC); Measured in reference to datums A, B, C							
9	4	MBD_A[ATC_050/*]	Minor	Diameter - Basic: = 52 in 2 places		Non-Reportable					
10	5	MBD_C[ATC_035/*]	Minor	Diameter - Basic: = 22 in		Non-Reportable					
11	6	MBD_C[ATC_035/*]	Minor	True Position: <= 0.15 in measure at least material condition (LMC); Measured in reference to datums G, H							
12	7	MBD_C[ATC_035/*]	Minor	Flatness: <= 0.05 in							
13	8	MBD_C[ATC_035/*]	Minor	Perpendicularity: <= 0.1 in measure at least material condition (LMC); Measured in reference to datum G							

Automated mechanism for generating and collecting First Article Inspection data

2014 Activities: ReqIF

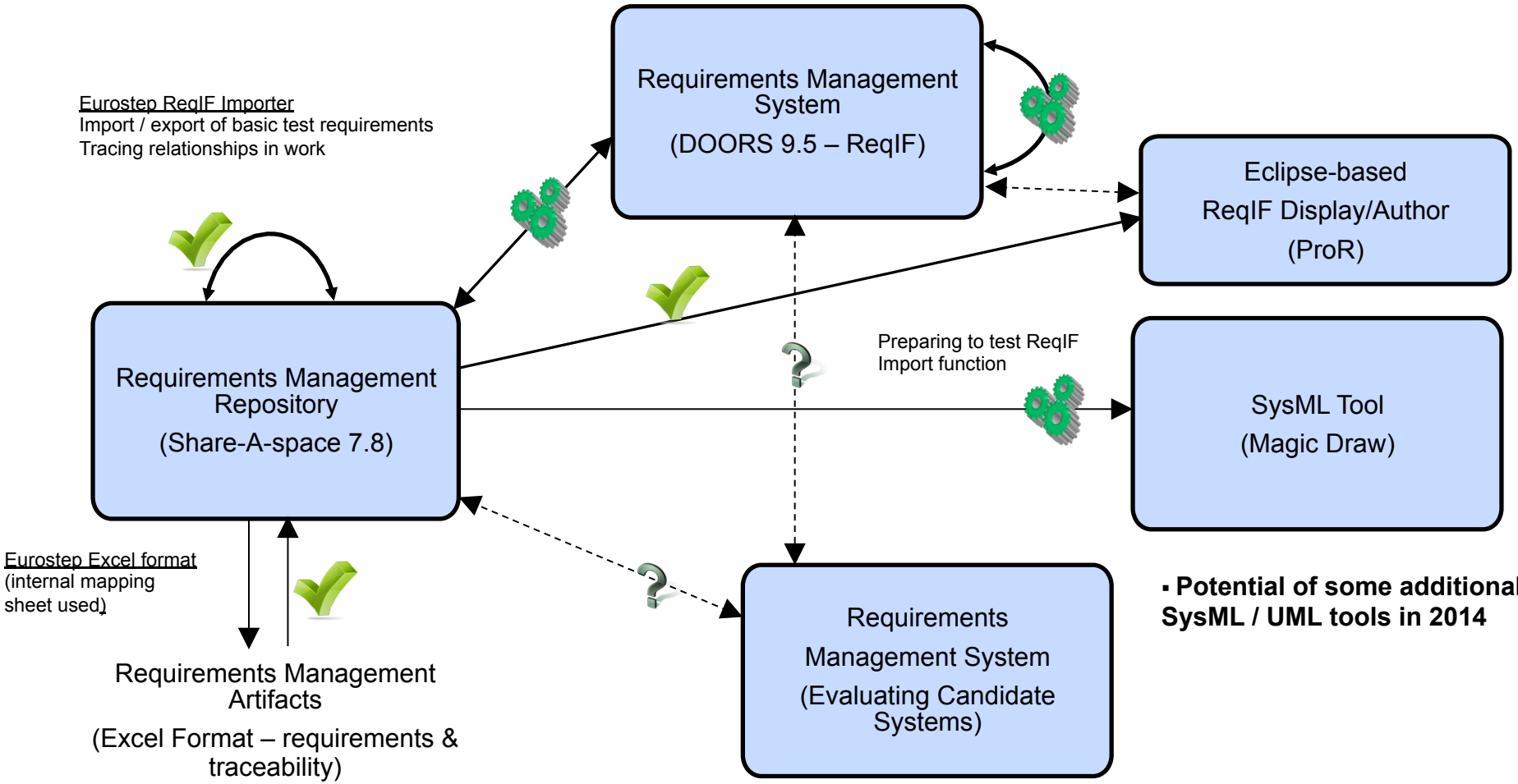

- **Potential of some additional SysML / UML tools in 2014**

2014 Activities: STEP AP233

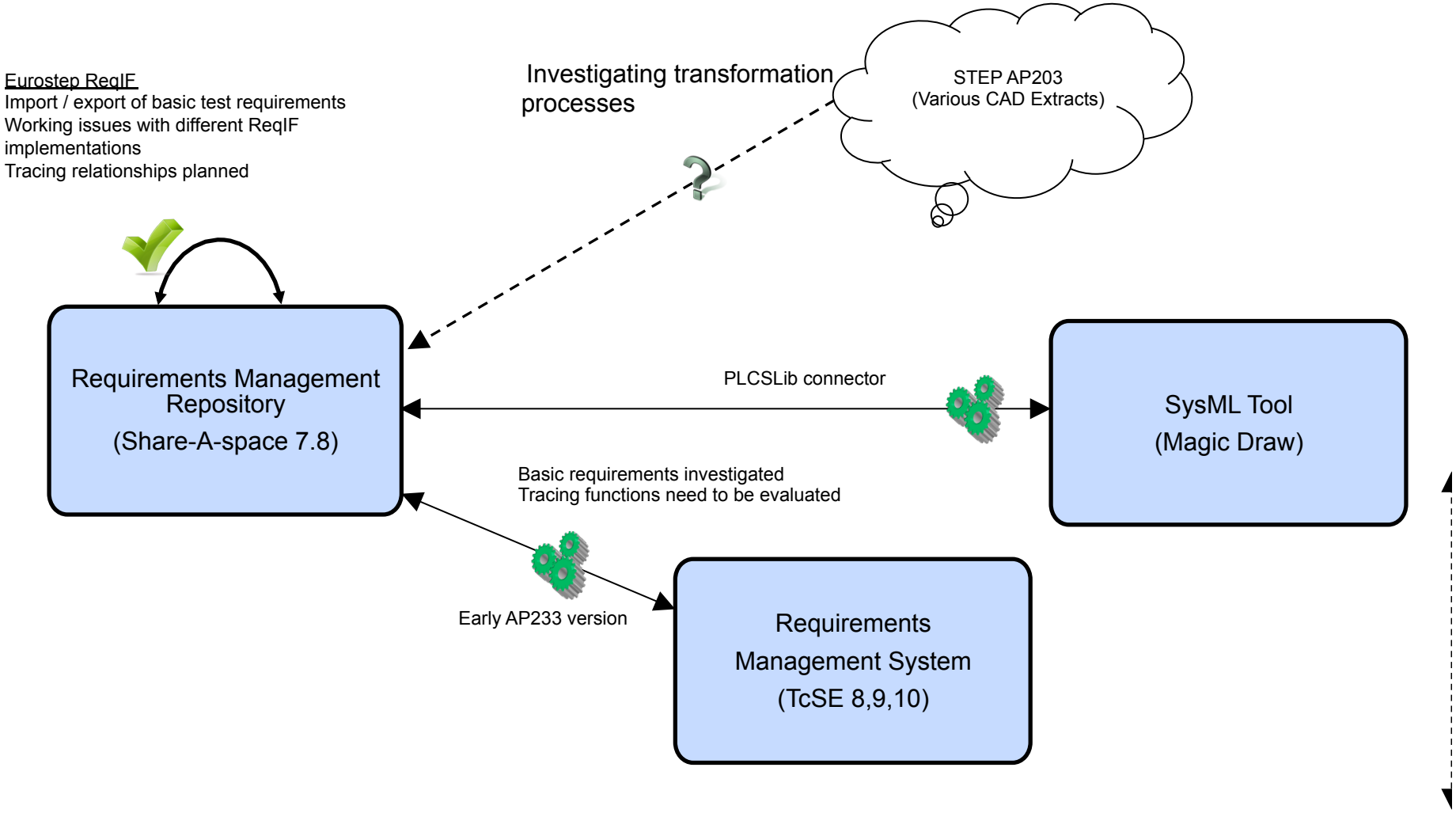

Product Development Systems Engineering Exchanges

Global Product Data Interoperability Summit | **2014**

share space

User: John.Russell@honeywell.com (Honeywell) Id Context: Honeywell, Honeywell

Requirement Version | Versions | Identifiers | Classifications | Used In | Time Roles | Properties | Traced by

_134_b4708631-29f8-4ea9-9f98-b8da6f4d233f

Id	Name	Value	Start Date	Role	Application Context
ReqIF.ForeignID	ReqIF.ForeignID	134	12/12/2013 1:22:13 PM	Actual	[/IGNORE//IGNORE] /IGNORE
ReqIF.ForeignCreatedThru	ReqIF.ForeignCreatedThru	Manual Input	12/12/2013 1:22:13 PM	Actual	[/IGNORE//IGNORE] /IGNORE
ReqIF.Text	ReqIF.Text	The car shall be assembled from modules by 1 person in 1 working day.	12/12/2013 1:22:13 PM	Actual	[/IGNORE//IGNORE] /IGNORE

Requirement

_12_d3c7c3... Verif...
_125_7a28a... Indic...
_130_c984f... Syste...
_131_cc2c0... Relia...
_132_c8814...
_133_c9b12... Modu...
_134_b4708...
_135_5f656... Failur...
_136_47221...
_137_ee8d1... Fuel...
_138_506fa...
_139_da47c...

Details

Tracing Relationship

ID

Name

Start-date 2013-12-12

End-date ∞

Parent _135_5f6561b1-abb3-4749-9b2f-edee84d5f686 Failure modes /IGNORE

Child _136_47221792-b7a1-45c1-a455-134bf67d821f /IGNORE

Ok

Matrix: Tracing Relationship

Comparison Function Proof of Concept

Comparison Viewer by Eurostep - View: Requirement/Criticality

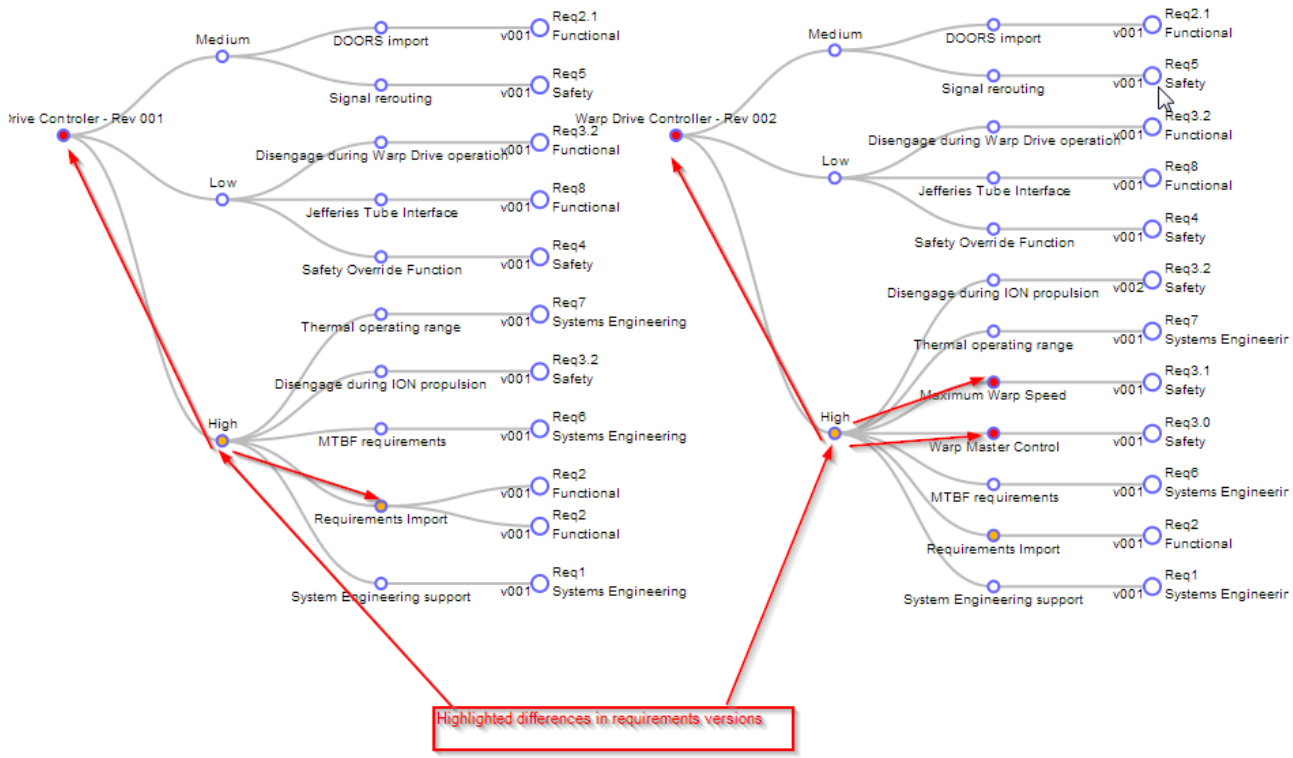

ReqID/Requirement Name/Criticality
Requirement Name/ReqID
Line/Requirement Name
ReqID/Requirement Name/Version
Traced From/Source Document/Requirement Name
Requirement - sorted by name
Requirement/Criticality

Line: 9
name: Signal rerouting
Version: v001
ReqID: Req5
ParentID: 0
Description: The solution shall provide easy physical and logical access to anyone named Scotty to reroute output signals to be used for or controlled by other ship functions
Criticality: Medium
Release: undefined
TracedFrom:
SourceDocument: Script Guidelines
Type: Safety

General Need for Comparisons of Versions – POC Discussion Topics

- What are the use cases – how does this fit with cross domain tracing?
- What input formats should be supported?
- How will this approach fit for large datasets? – human factors will be a major consideration
- Are there better approaches?

Lessons Learned To Date

- Basic text requirement exchange works with in most cases – properties and traces have been difficult.
- Pre-release version of STEP AP233 being used in some translators.
- Minor differences exist with current AP233 requirement translations – investigating how difficult to solve; expect that to be affordable
- Situation with common tracing relationships unknown at this time
- Visualization tools and STEP translations improving in retaining CAD PMI (electrical and mechanical) for requirements tracing
- STEP AP239/233 provides mechanism for linking disparate sources of information.
- GUID's by themselves are not enough to guarantee uniqueness
- Investigating ReqIF and XMI best practices for improved alignment.
- ReqIF development improved through use of purchased ReqIF Guidelines
- **A common Implementer's Forum would accelerate interoperability**

Notional Multi-organization Demonstration

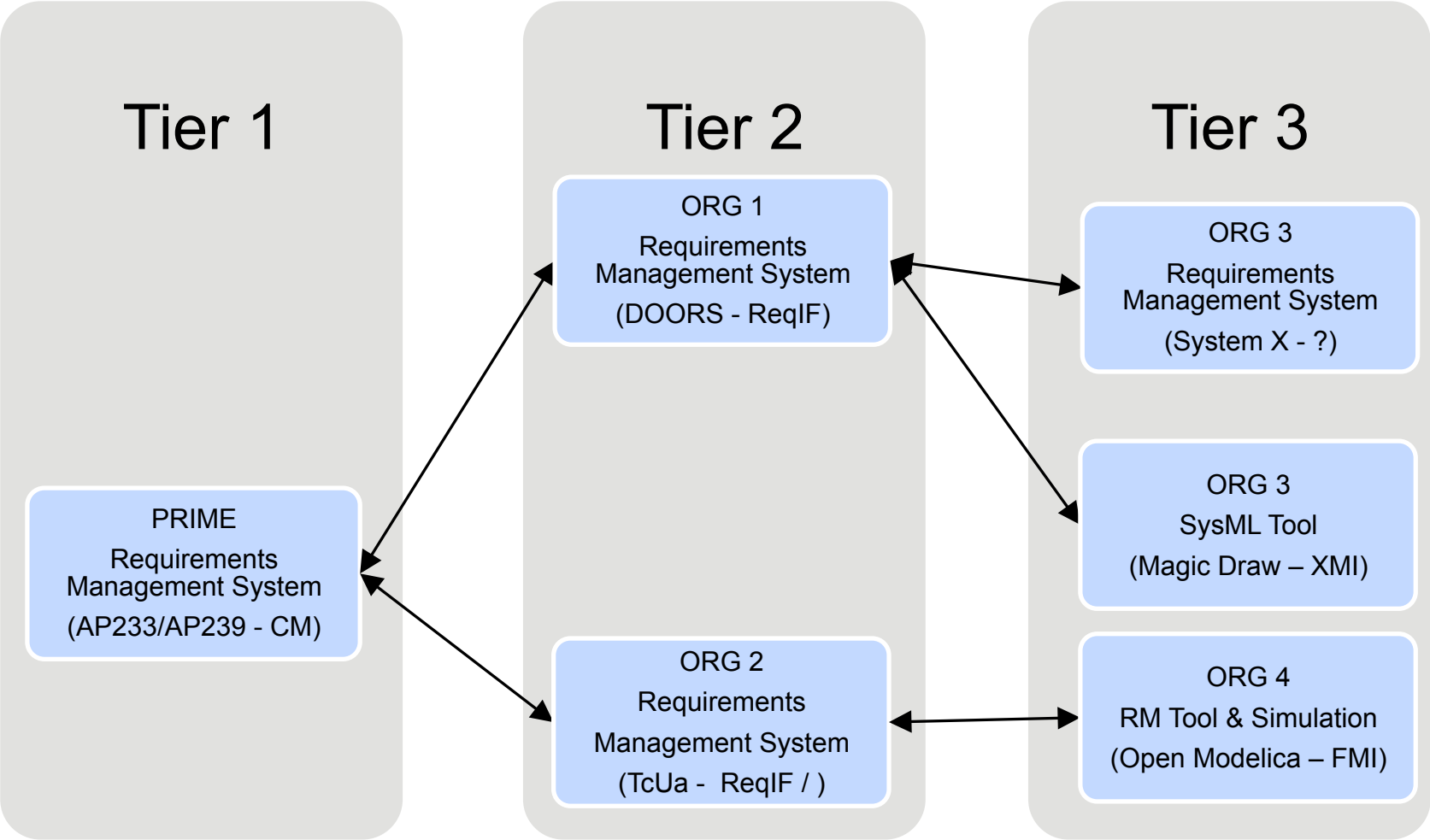

Next Steps

- **Improve requirements**
  - ✓ **Atomic diagnostic tests to speed development**
  - **Align with 15288 guidelines**
  - **Make physical models public – electrical and mechanical**
  - **Build out tracing relationships for prioritized use cases**
  - ✓ **Move/recreate requirements in DOORS 9.5; enable OSLC and ReqIF exchanges**
- **Establish testing framework**
  - ✓ **Collaboration site for tracking and results**
    - Contact John.Russell@honeywell.com for access to site and further information or feedback
  - ✓ **Investigate Implementers Forum for SE Tool Interoperability: Greg Pollari leading PDES, Inc. project**