FLEXIBLE TECHNICAL DATA PACKAGES: TEMPLATES & USE CASES

Elysium Inc.

Dan Dezarov, Annalise Suzuki

Technical Data Packages – What Are They?

A technical data package (TDP) can be any combination of material that forms a <u>complete</u> definition for a product or process.

- Work instructions
- Product definition
- Sketches/Drawings
- Images
- Process diagrams
- Manufacturing instructions
- Design requirements
- Etc.

Technical Data Packages – What Do They Support?

Design

Manufacturing

Quality

Shipping/Receiving

Purchasing

Sustainment

Technical Data Packages – Does Accessibility Matter?

- **How will users view the data?**
  - **Hint: not everyone has a CAD system or viewer**
  - **Hint^2: TDPs don't ONLY contain CAD data**
- **What information needs to be present in <u>your</u> TDP?**
- **What form will this information be present in?**
  - **3D? ZIP? PDF? CSV? HTML? JSON? XML? PNG? JPEG? DOCX?**

Common Data Representation

CAD formats

- NX
- CATIA/ 3DEXPERIENCE
- Creo
- SOLIDWORKS
- Inventor

Neutral / Visual CAD formats

- STEP
- JT
- STL
- QIF
- Parasolid
- 3D PDF
- HTML

Non-3D Data

- PDF
- Microsoft Word
- Microsoft Excel
- CSV
- MP4
- JPEG
- HTML
- XML

Common Data Representation – Downstream Users Matter

- **Identify the consumer**
  - **What information is required (purpose)**
  - **How is the data consumed?**
    - **Formats**
    - **Usability**
    - **Lean**
    - **Completeness**

Common Data Representation – Consistency is Key

- **Verify that any derivative is credible**
- **Communicate the authoritative model**
  - **May be the master; may be a derivative**
  - **Which is the legal entity?**
  - **3D or 2D?**
- **Ensuring derivatives are populated from a single source**

Product Verification – (Data Quality)

Global Product Data Interoperability Summit | **2019**

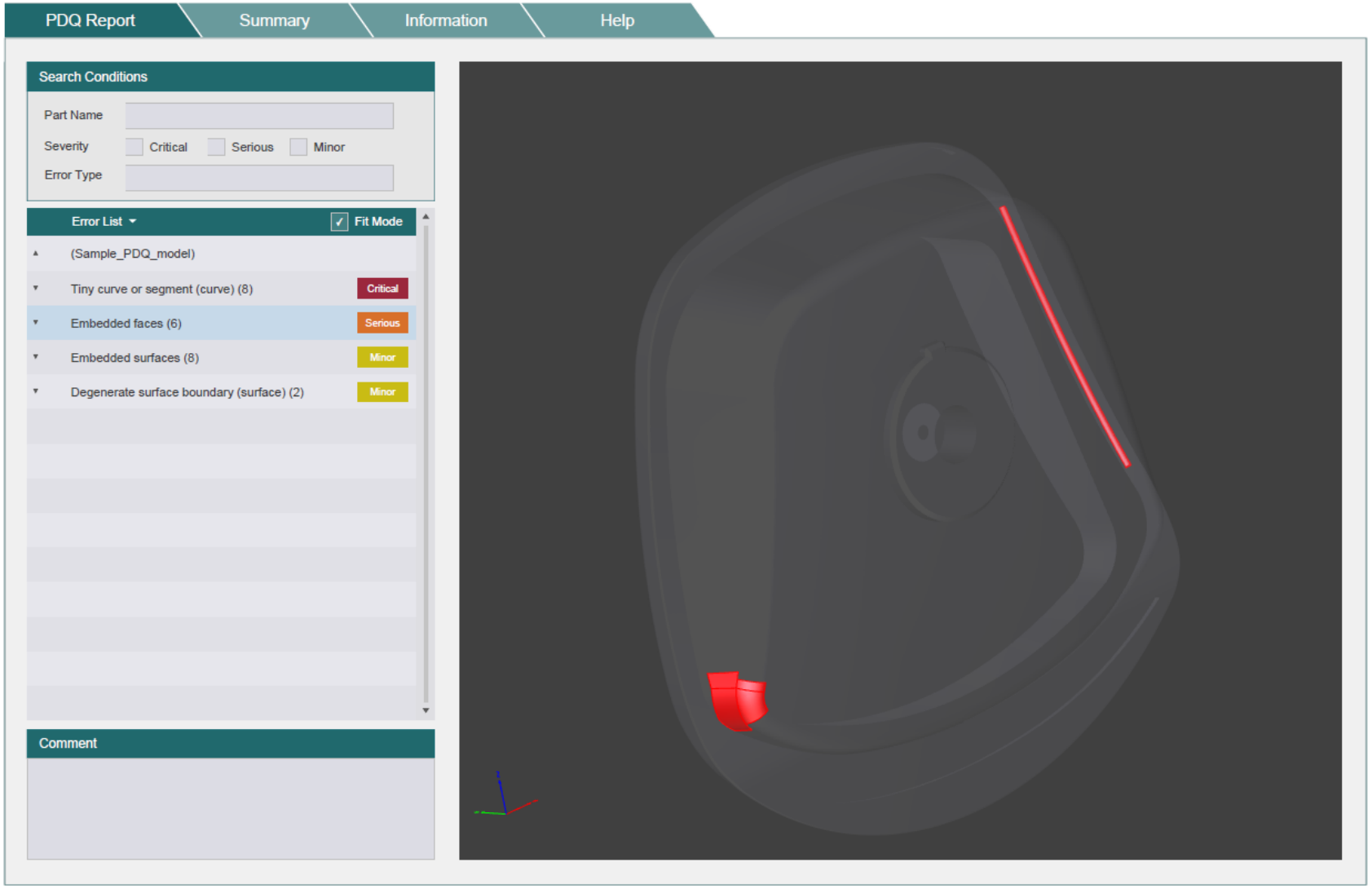

Product Definition

- **Design Specifications**

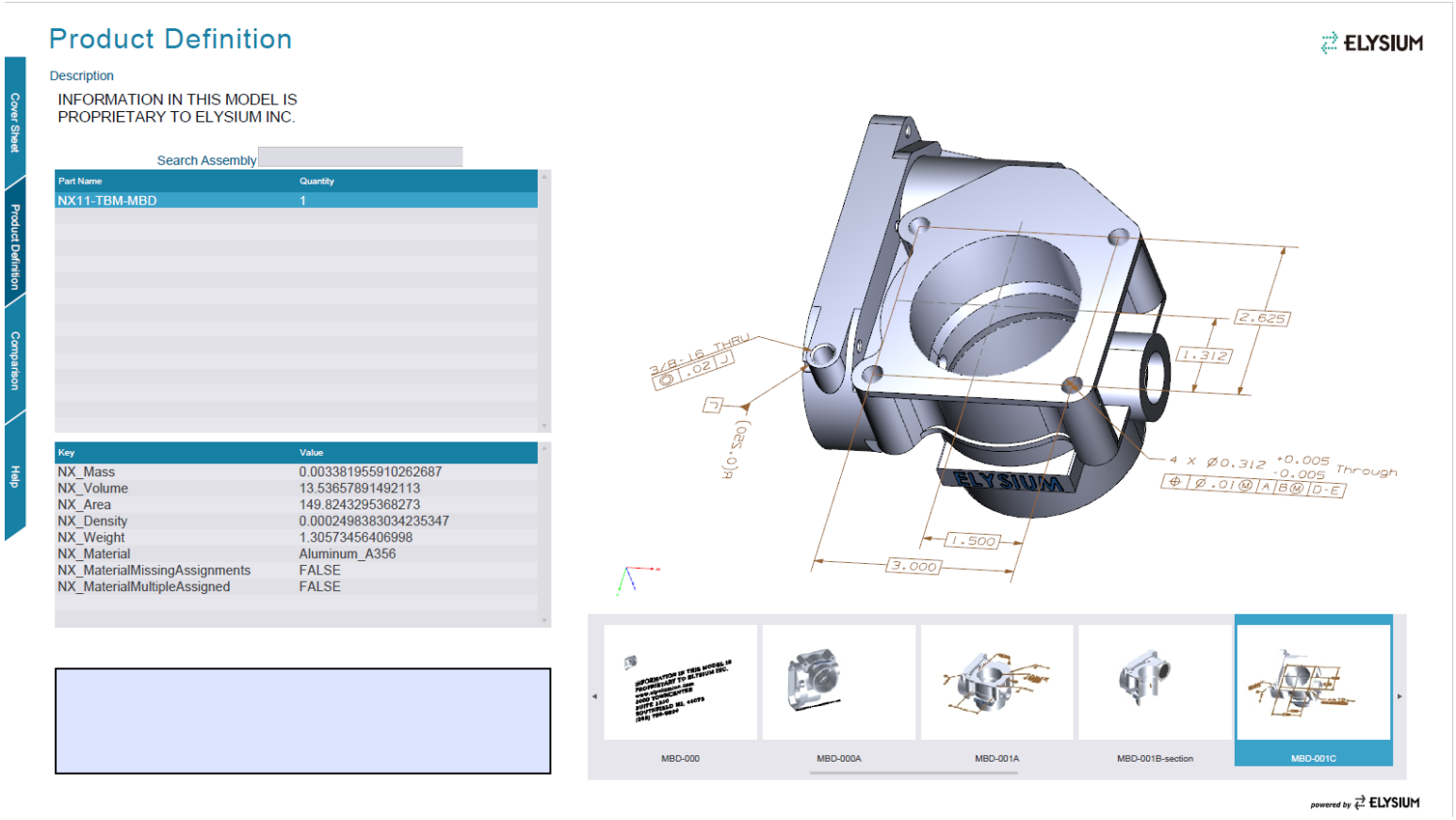

Data Validation

- **Data Conversions**
  - **CAD to CAD**
  - **STEP or other neutral derivatives**
- **CAD Upgrade**
- **Archival (LOTAR)**

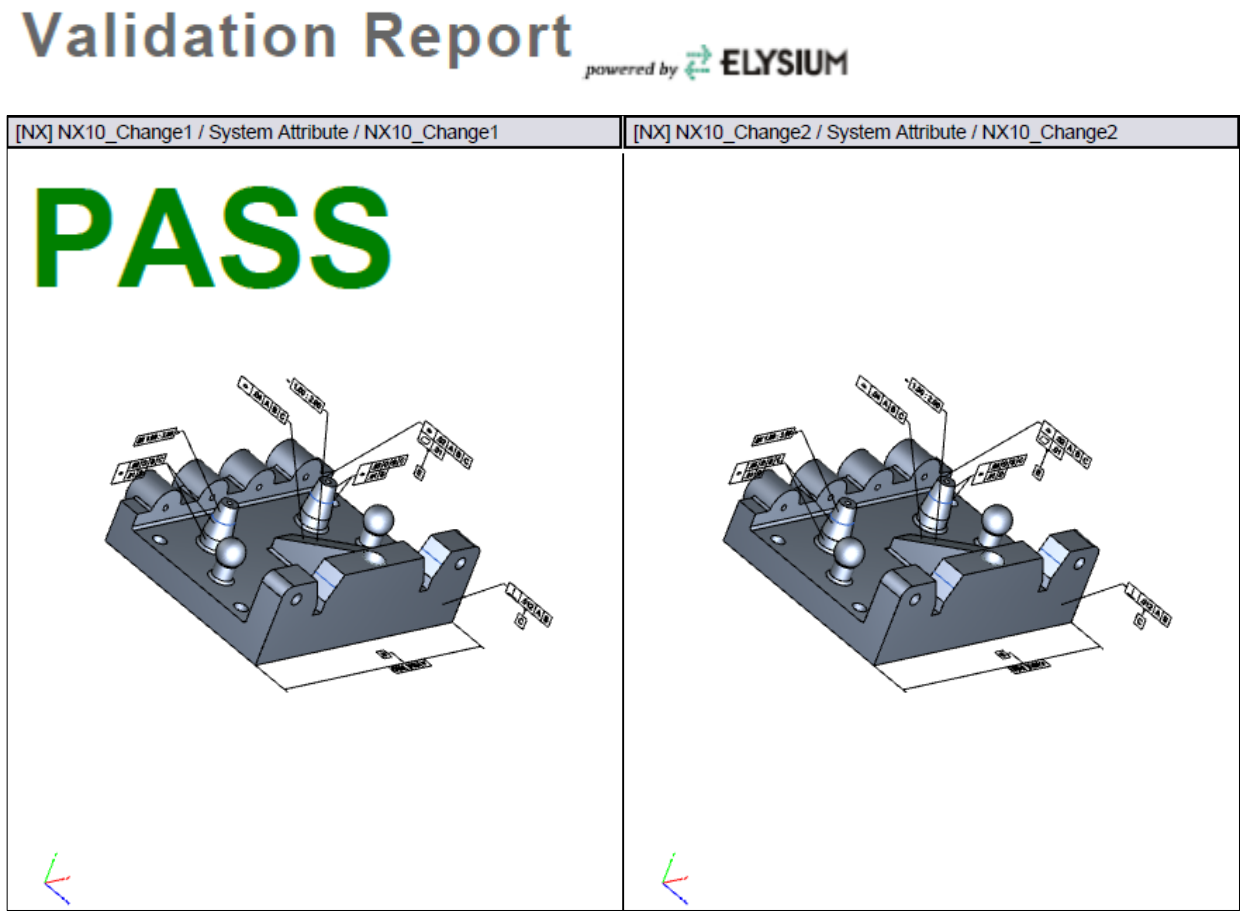

CAD to CAD Conversion

Global Product Data Interoperability Summit | **2019**

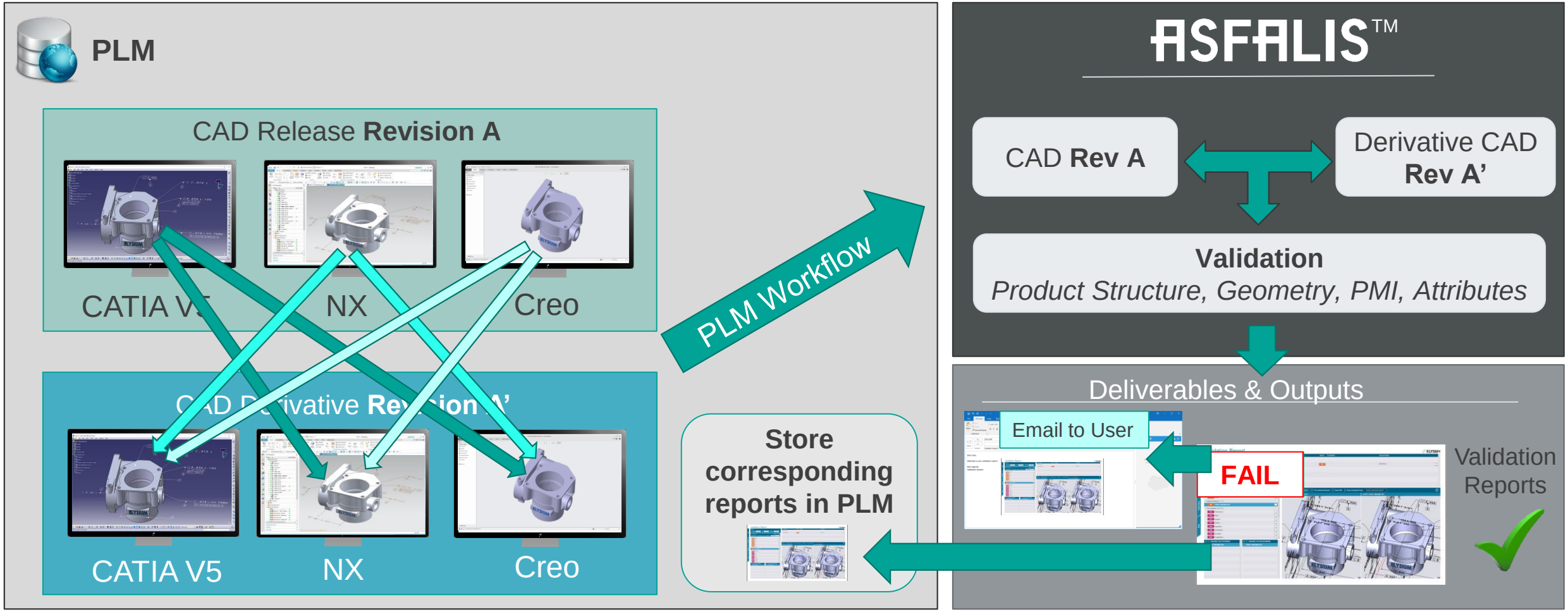

Engineering Change Notice

Global Product Data Interoperability Summit | **2019**

Engineering Change Notice

ECN #

ELYSIUM

Cover Sheet | Eng. Change Notice | Comparison | Attachments | Help

New Part Number / Rev.

Old Part Number / Rev.

ECB Approval:

Part Name

Date

Material Disposition

- [ ] Scrap
- [ ] Modify
- [ ] Use as is

Reason for Change

Description of Change

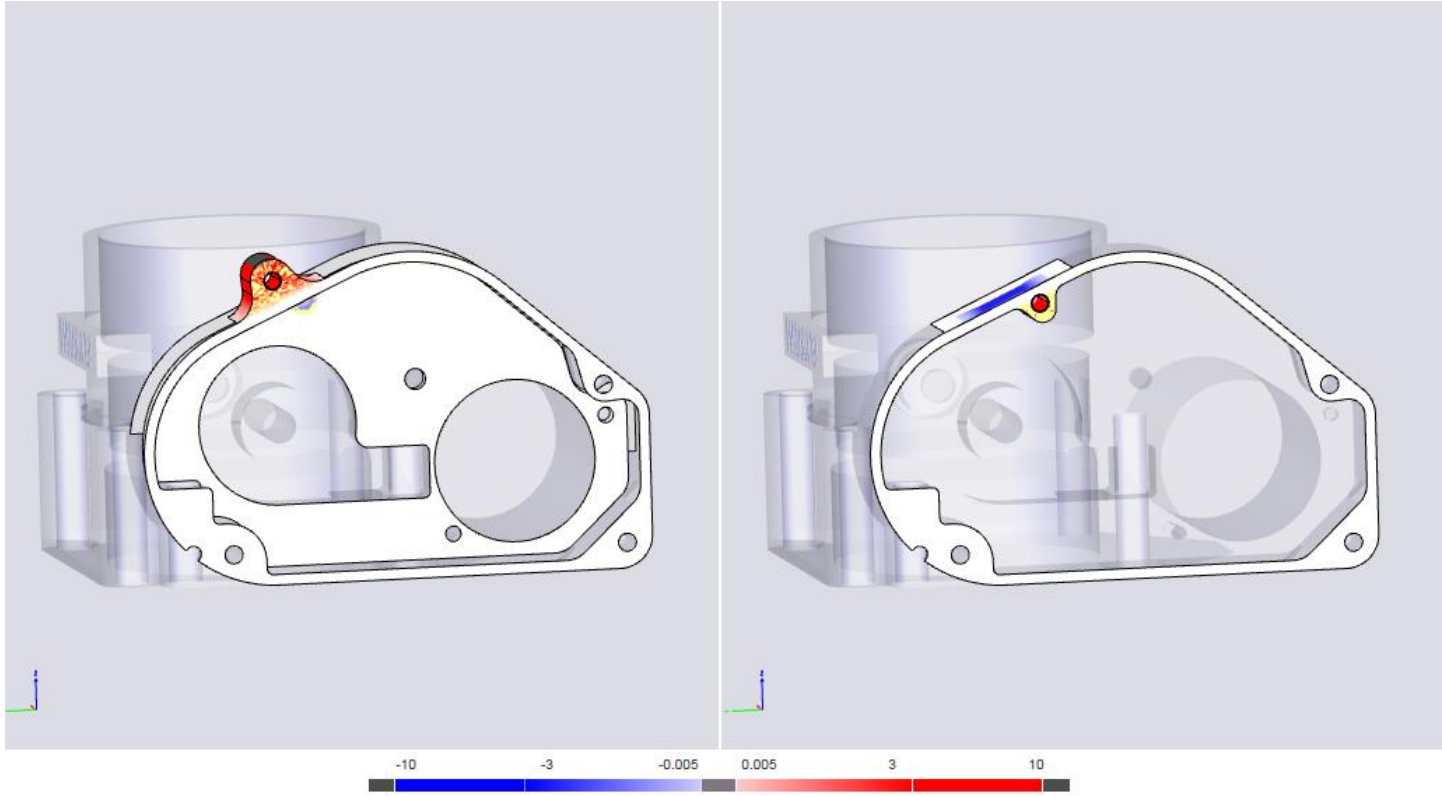

Engineering Change Request / Notification

Global Product Data Interoperability Summit | **2019**

Military Supplier

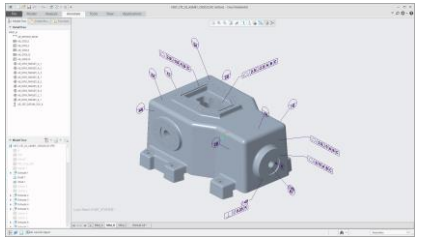

Proposed Creo Release
"Revision B"

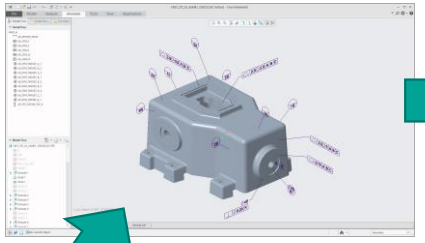

Engineering wants to make a change

Publish Approved Change Request to Appropriate Groups

ASFALIS™

Creo **"Rev A"**

Creo **"Rev B"**

Validation
Product Structure, Geometry, PMI, Attributes

Dynamically Build Change Request:
Filter / color code approved & unacceptable changes

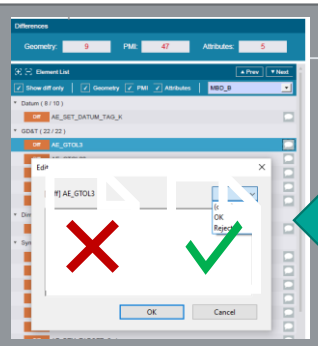

Deliverables & Outputs

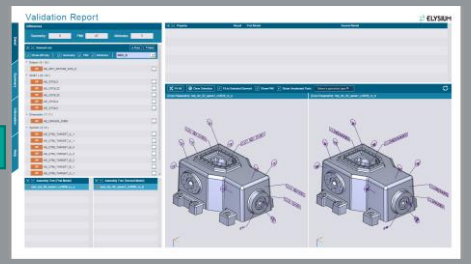

Validation Report

MBE Workflows with flexible data package elements

Data Exchange with Customers/Suppliers

Global Product Data Interoperability Summit | **2019**

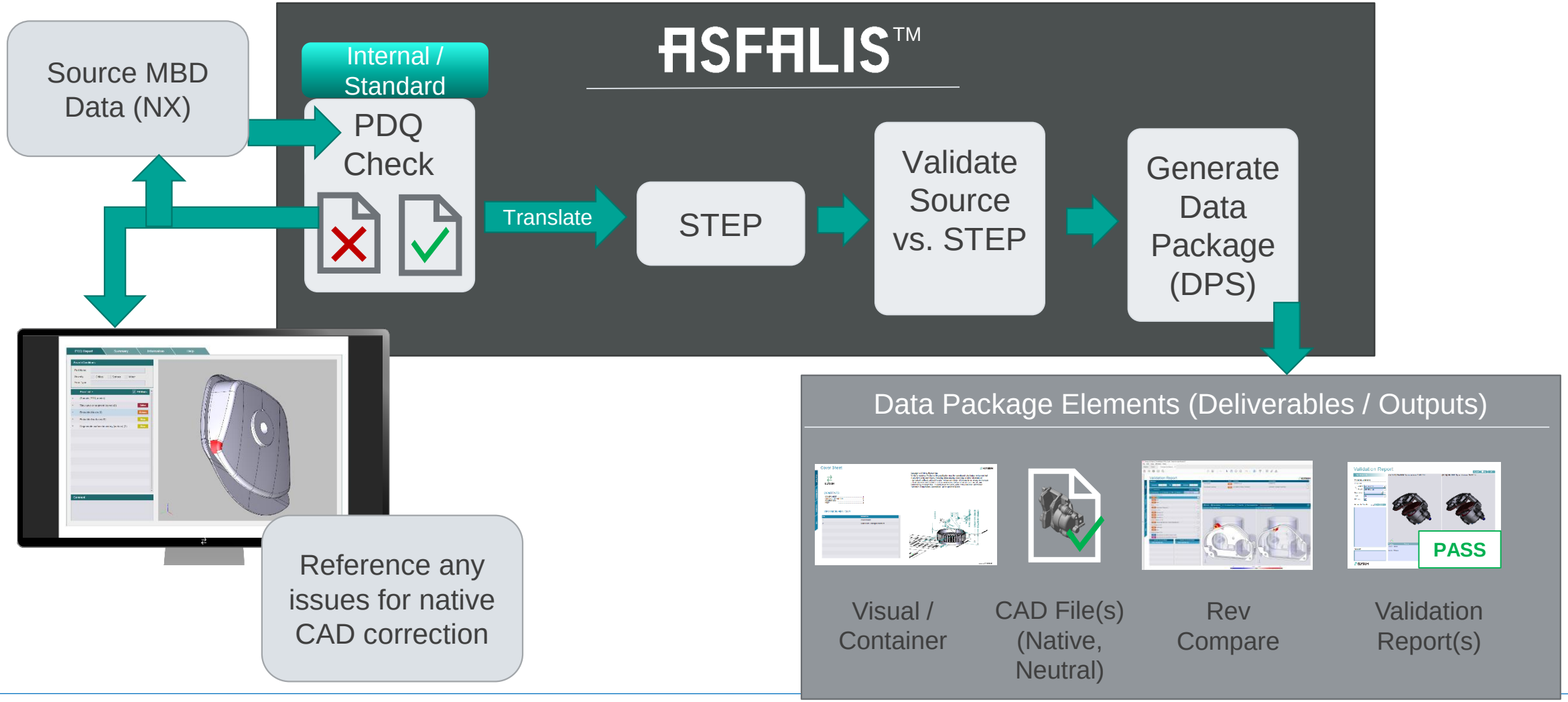

LOTAR Process Flow (LongTerm Archival & Retrieval)

Global Product Data Interoperability Summit | **2019**

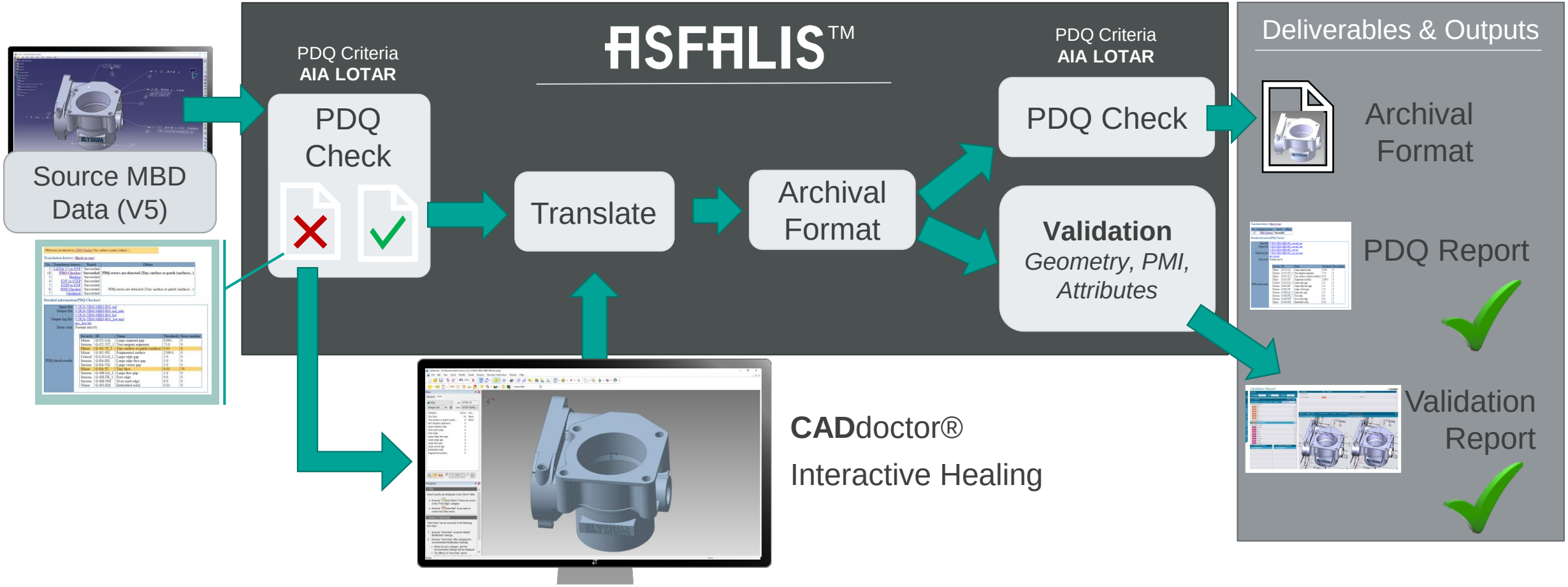

Technical Data Package Creation

Global Product Data Interoperability Summit | **2019**

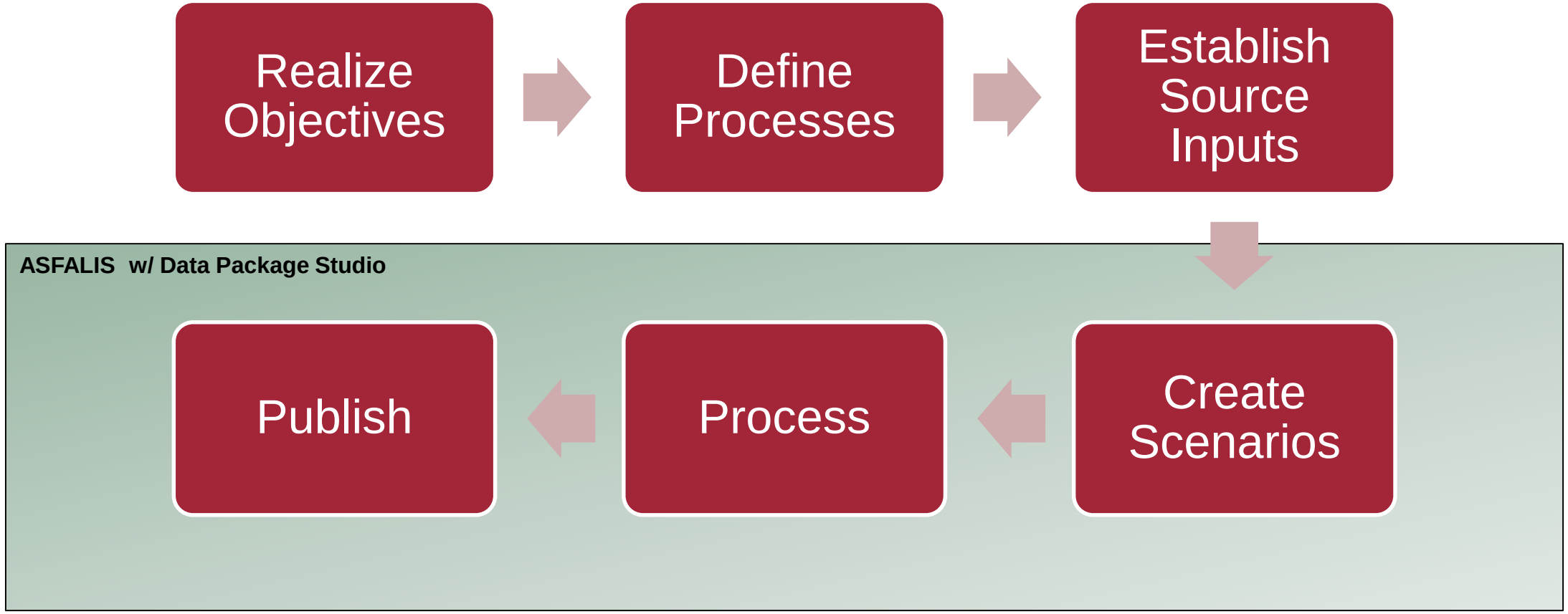

Product Definition Demo

Exploring Support for Smart Specifications

Global Product Data Interoperability Summit | **2019**
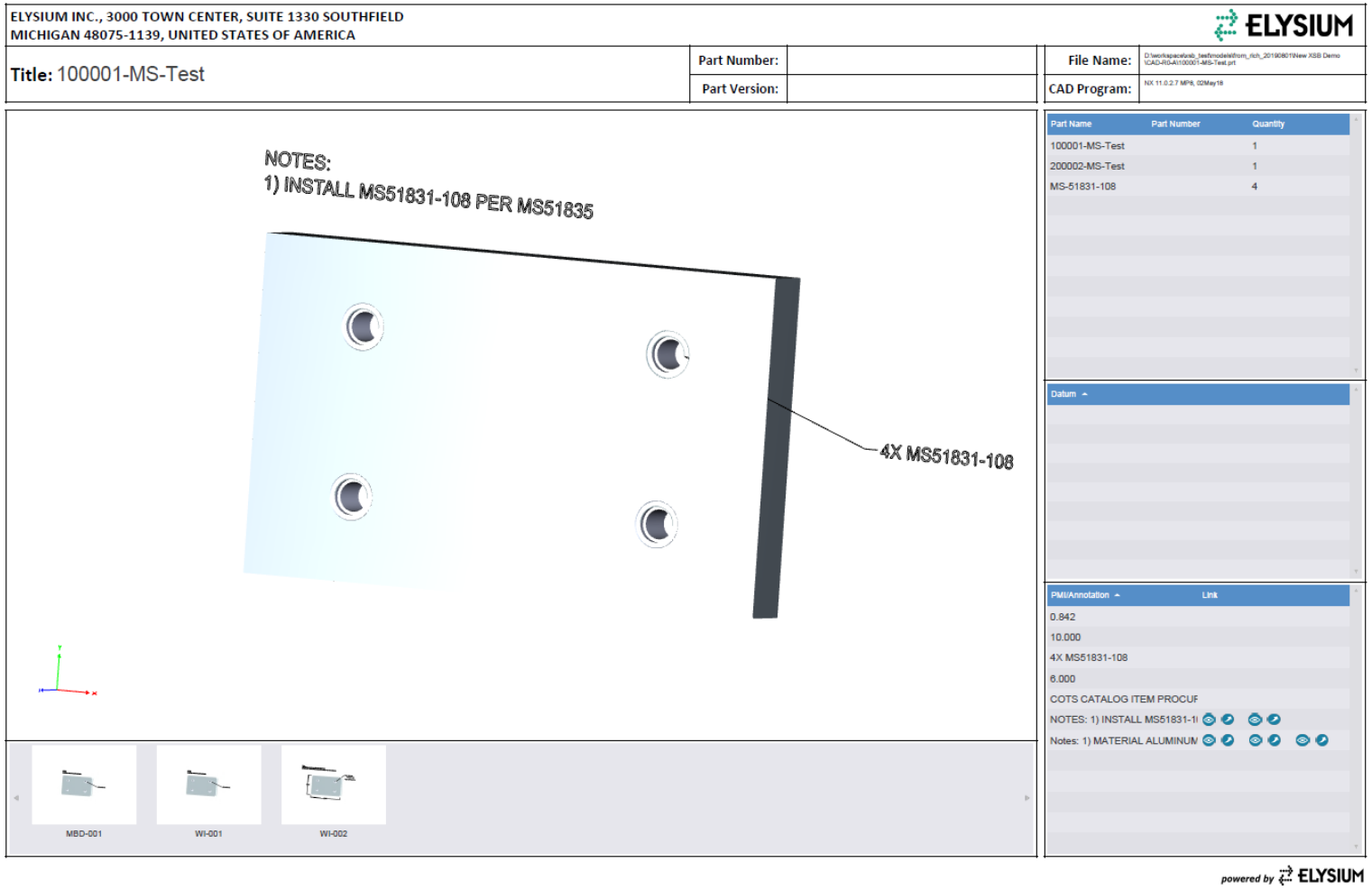
- Collaboration with XSB
- Linking specifications in a data package
- Demo with XSB Tuesday @4:50PM Yucca Room